RESİM ÜZERİNDEN ÖLÇÜ ALMAYINIZ
DO NOT SCALE

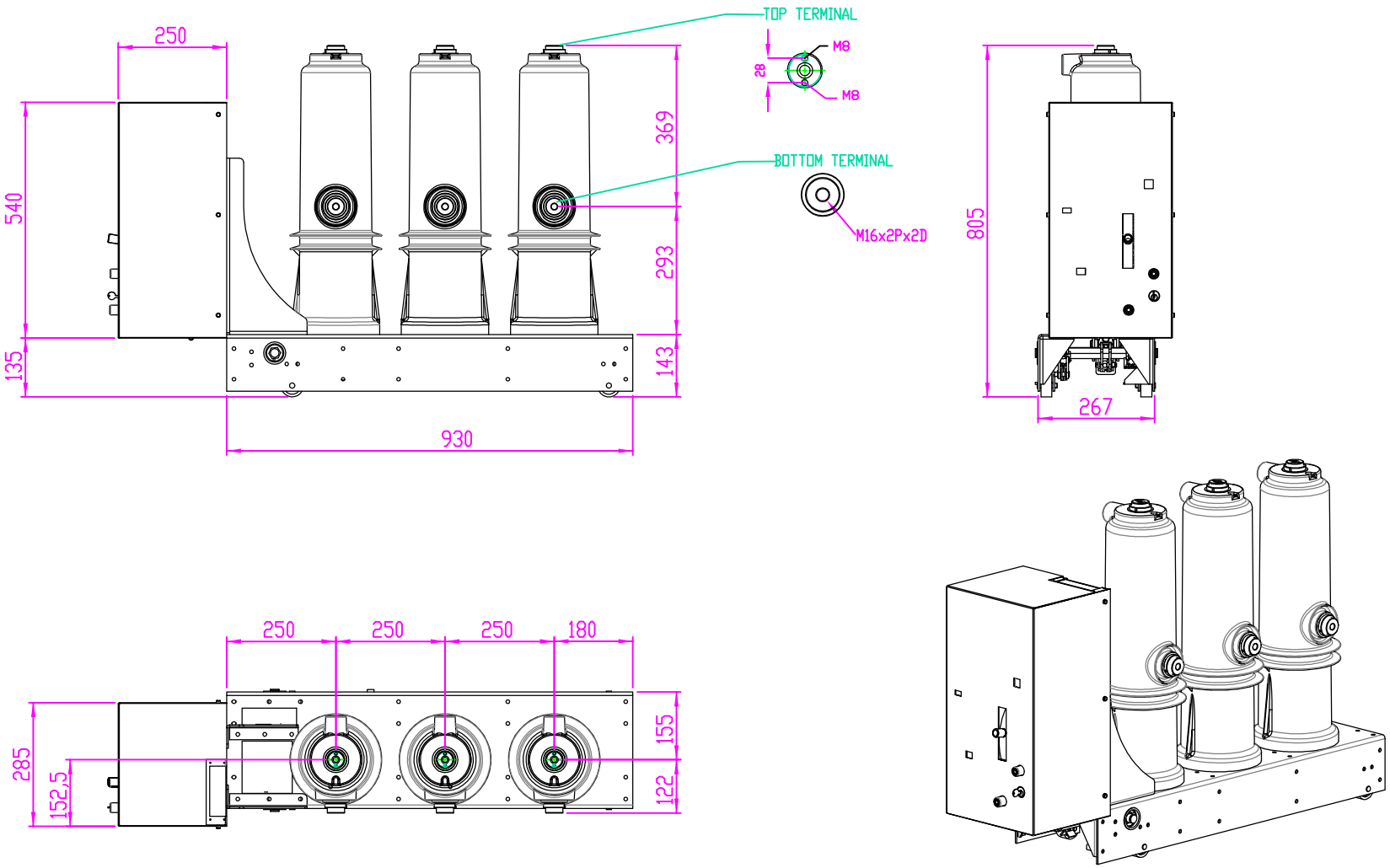

All tecnical information contained in this document is the exclusive property of BATEL A.S. and may neither be used nor disclosed without its prior written consent. Equipment manufactured according to this drawing may neither be presented nor displayed in any manner without the prior written consent of BATEL A.S.

Bu resimdeki bilgiler BATEL A.S nin mal 'd 'r. Yaz 'l 'izni olmadan ▒ 'lt 'lamaz ve kullan 'lamaz. Bu resme g 'e imal edilen par ▒ BATEL A.S. nin izni olmaks 'z 'n • • c • ki 'llere g 'terilemez ve a • klanamaz.

Endeks Index	Tarih Date	Degisiklik/ Modification	Çizen Name	İmza Signature	Kontrol Control	İmza Signature	Onay Approved	İmza Signature
A	07.01.2010	ILK YAYIN	BA		MA		MA	
			Çizen/Drawn by		Kont./Checked by		Onay/App. by	

Malzeme / Material
NOTA BKZ.
Normu / Standard

Yuzey islem/Protection
Tolerans Verme : ISO 8015
Genel Toleranslar : ISO 2768 mK
Agirlik / Weight
~ ---- Kg.
Isil islem/Heat treatment

BATEL
ELEKTROMEKANİK
SANAYİ VE TİCARET A.Ş.

Parça Adi / Part
24kV 630/1250A 16-25kA/1s VACUUM CIRCUIT BREAKER
Lateral typeAux. Voltage for opening and closing coils DC220V DC

Ölçek/Scale 1/1
Sayfa/Page 1/1

Kullanildigi yer / Assembly
.....
Ürün / Device or equipment
.....

BVK24

Ind/rev
A0

Bu resimdeki bilgiler BATEL A.S. nin mal 'd 'r. Yaz 'l ' izni olmadan
kullan 'lamaz ve kullan 'lamaz. Bu resme g 'e imal edilen par BATEL A.S.
nin izni olmaks 'z 'n ••c•kl 'lere g 'terilemez ve a•klanamaz.

All tecnical information contained in this document is the exclusive property of BATEL A.S. and may neither
be used nor disclosed without its prior written consent. Equipment manufactured according to this drawing may neither
be presented nor displayed in any manner without the prior written consent of BATEL A.S.

Endeks / Index	Tarih / Date	Degisiklik / Modification
A	30.12.2009	ILK YAYIN

Çizen / Drawn by		Kont./Checked by		Onay/App. by	
Name	Signature	Kontrol / Control	Signature	Onay / Approved	Signature
BA		MA		MA	

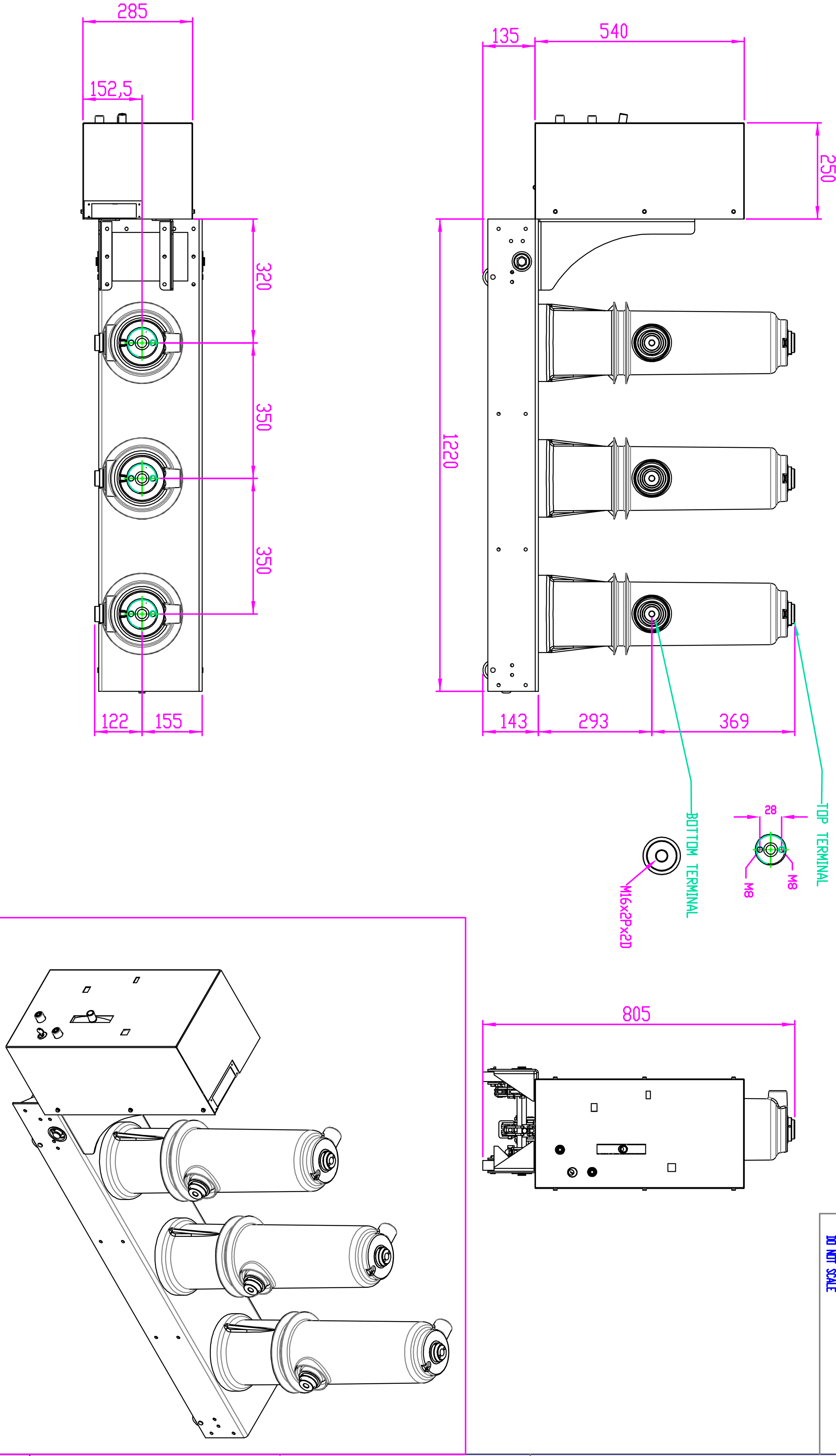

Malzeme / Material: NOTA BKZ.

Normu / Standard

Ölçek/Scale: 1/1

Sayfa/Page: 1/1

Yuzey islem/Protection

Tolerans Verme : ISO 8015

Genel Toleranslar : ISO 2768

Agirlik / Weight: ~ Kg.

Isil islem/Heat treatment

Parça Adı / Part

38/40.5kV 630/1250A 16-25kA/3s VACUUM CIRCUIT BREAKER

Lateral type Aux. Voltage for opening and closing coils DC220V DC

Kullanıldıgı yer / Assembly

Ürün / Device or equipment

BATEL ELEKTROMEKANİK SANAYİ VE TİCARET A.Ş.

BVK38/40,5

Ind/rev: A0

RESIM ÜZERINDEN ÖLÇÜ ALMAYINIZ
DO NOT SCALE